NORBIT
iSBP

Simultaneous Bathymetry and Sub-Bottom Profiling



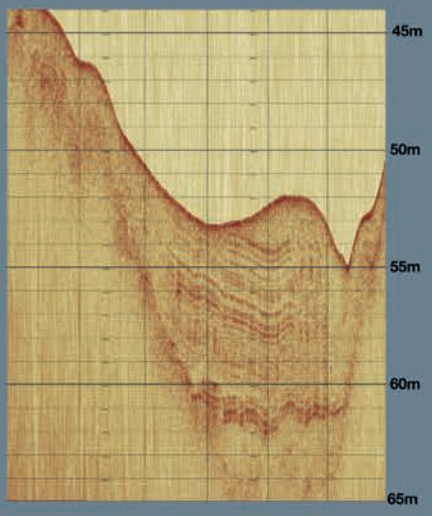

Introducing NORBIT Sub Bottom Profiler (iSBP)

NORBIT brings ultra portability and easy integration with the combined Bathymetry and sub bottom profiler solution featuring NORBIT WINGHEAD X or WBMS X multibeam system with iSBP.
Used together with an integrated NORBIT WINGHEAD X or WBMS X sonar, the iSBP from NORBIT is a unique offering supporting simultaneous mapping of sea bottom and sub bottom conditions in the same workflow.
This makes combined surveying efficient, saving operating time, and speeding up post processing as all data is mapped with the same georeference.

KEY FEATURES

- Fully Integrated Electronics
- Electronic Beam Steering (+/-10°)
- Range resolution up to 5cm

APPLICATIONS

- Marine geophysical surveys
- Inshore and nearshore mapping
- Geotechnical investigations
- Sediment characterisation and sub-seafloor analysis

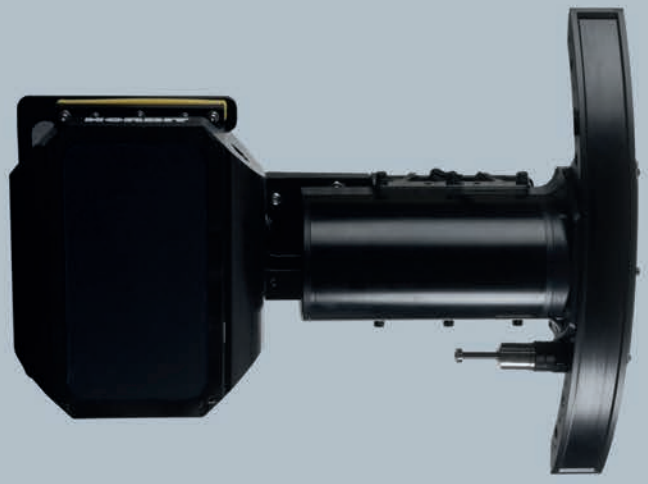

www.seabed.nl sales@seabed.nl

SEABED

iSBP

NORBIT
- explore more -

Specifications

Sonar Specifications		
Seabed Penetration	Up to 30m	
Output Format	SES3 Full-waveform raw data	
Operating Primary Frequency	85-115kHz	
Source Level	230dB RMS/236dB Peak	
Operating Bandwidth	Up to 20kHz	
Secondary Frequency	6-15kHz	
Pulse Shapes	CW, Ricker	
Beam Width	4° x 8°	
Max Ping Rate	25Hz	
Max Pulse Length	0.5ms	
Max Duty Cycle	0.25%	
Operating Depth	Max 60m	
Weight	In air iSBP: 9.0kg Bracket: 4.0kg X Sonar: See product datasheet	In water: iSBP: 3.8kg Bracket: 3.5kg X sonar:; See product datasheet
Operating Temperature	-5°C to 40°C	
Supply Voltage	15 to 30 VDC	
Cable Length	Std 8m Options: 20m, Pigtail, custom up to 25m	

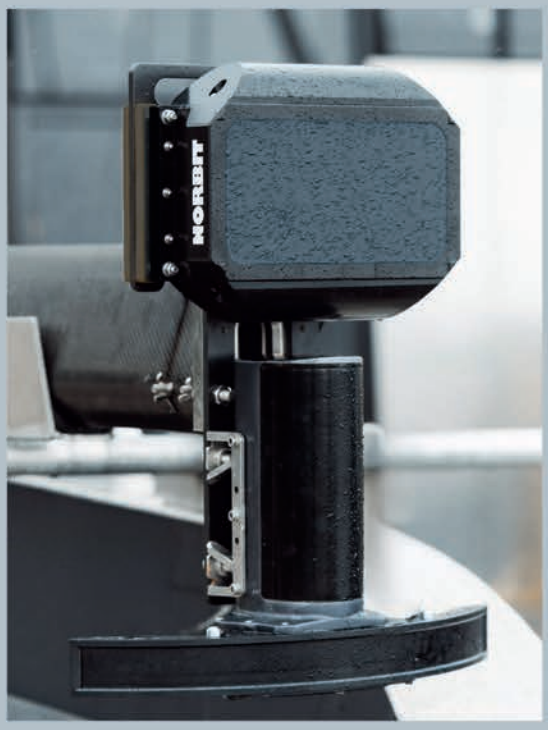

OUTLINE DIMENSIONS

WBMS X and iSBP

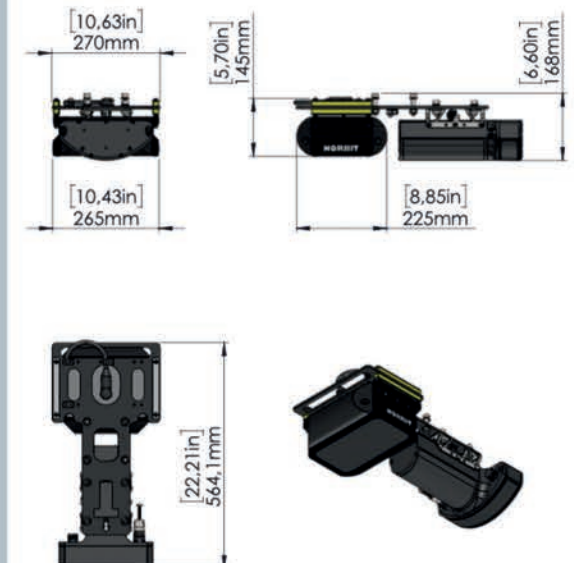

WINGHEAD X and iSBP

