NORBIT WINGHEAD® X

Configurable Bathymetric Sonar System

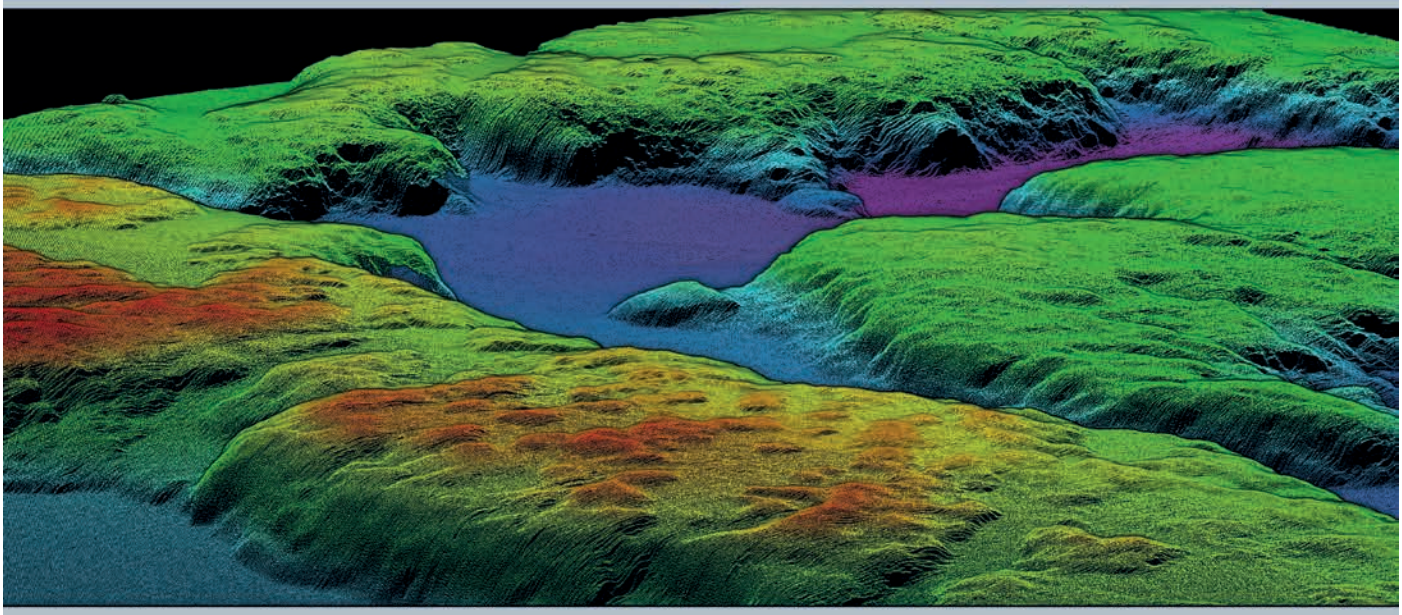

Customisable Bathymetric Sonar for Any Mission

Introducing the WINGHEAD X, the newest adaptable member of our cutting-edge multibeam sonar family. At the heart of this ultra-compact, curved array system is a highly configurable platform, purpose-built to be tailored to your specific survey requirements.

WINGHEAD X is designed to fit your mission—not the other way around. Its modular architecture ensures seamless integration into any operational environment, while maintaining exceptional high-resolution performance, even in conditions with significant vessel motion.

KEY FEATURES

- High resolution 0.5°x 0.9°
- Ultra Compact
- Customisable
- Active Roll, Pitch and Yaw Stabilisation
- Backscatter Outputs
- <10mm Resolution
- Integrated Field Replaceable Sound Velocity Probe
- Multidetect
- Exceeds IHO Exclusive Order & USACE New Work

OUTLINE

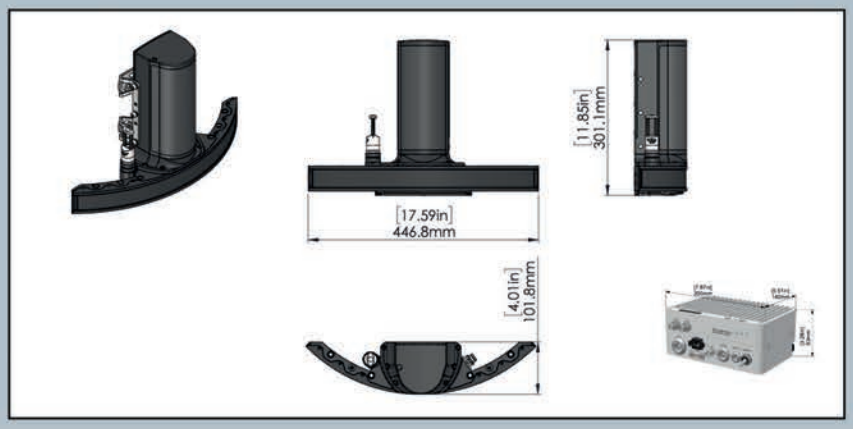



Entire sonar system is delivered in a single pelican case

WINGHEAD X

NORBIT
- explore more -

Specifications: Integrated and non-integrated

Sonar Specifications - Choose your base model

Standard		Long Range	
Depth Range	0.2-400m	**Depth Range**	0.2-600m
Weight	6.9kg (air) 3.7kg (water) Excl. bracket 7.4kg (air) 3.8kg (water) Incl. bracket	**Weight**	8.0kg (air) 4.2kg (water) excl. bracket 8.5kg (air) 4.7kg (water) incl. bracket
Operating Frequency	Nominal frequency 400kHz (frequency agility 200-700kHz)	**Operating Frequency**	Nominal frequency 200kHz and 400kHz (frequency agility 200-700kHz)
Resolution (Across x Along)	0.5° x 0.9° @400kHz 0.3° x 0.5° @700kHz	**Resolution (Across x Along)**	0.5° x 0.9° @400kHz 1.0° x 1.8° @200kHz

Common Sonar Specifications

Number of Beams	EA & ED: 256, 512, 1024 (option), 2x1024/Dual Swath (option)	**Swath Coverage**	5-210° flexible sector (Shallow water IHO special order >155°)
Ping Rate	Up to 60Hz, adaptive	**Backscatter Outputs**	Intensity, Sidescan, Snippets, Water Column
Environmental	Topside: IP67 compliant	**Depth Resolution**	<10mm acoustic w. 80kHz Bandwidth
Depth Rating	100m	**Power Consumption**	Typical 50W-80W, 10-28VDC, 100-240VAC
Interface	Ethernet	**Operating Temperature Storage Temperature**	-4°C to +40°C (topside -20°C to +55°C) -20°C to +60°C

OEM GNSS/INS Integration Options

	Applanix OceanMaster	SBG Apogee
Position	HOR: ±(8mm +1ppm x Distance from RTK station) VER: ±(15mm +1ppm x Distance from RTK station) (Assumes 1m GNSS separation)	HOR:±(10mm+0.5ppm x distance from RTK station, independent of antenna separation) VER: ±(15mm+1ppm x distance from RTK station, independent of antenna separation)
Heading Accuracy	0.02° with 2m antenna separation	0.02° (0.01° PPK) with 2m antenna separation
Pitch/Roll Accuracy	0.01° independent of antenna separation	0.008° RTK (0.005° PPK) independent of antenna separation
Heave Accuracy	2cm or 2% (TrueHeave™), 5cm or 5% (Real Time)	2cm or 2% (Delayed heave), 5cm or 5% (Real Time)

Software Options

Pitch Stabilisation	Real-time compensation for vessel pitch to ensure even sounding density in dynamic conditions	**1024 Beams**	Increase sounding density across track
Yaw Stabilisation	Real-time compensation for vessel yaw to ensure even sounding density in dynamic conditions	**STX Scanning**	Rapid electronic transmit beam scanning to combine proven 2D bathymetry into 3D georeferenced bathymetry.
Dual Swath	Doubles survey sounding density along track by transmitting two swaths per ping cycle	**Backscattering Strength Output**	BSO provides fully repeatable backscatter results, as well as compatibility with physical models, for seafloor and habitat classification
NORBIT Data Collection and visualisation	Data Collection Tool (DCT) and real time 3D Point Cloud visualisation available for INS-integrated systems	**3rd Party Data Acquisition & Post Processing**	HYPACK, QPS, BeamworX, EIVA, and others

Hardware Options

Pole Mount	NORBIT Carbon fibre mounting pole (PORTUS).	**Housing Material**	Optional Titanium housing
Cable Length	2m, 8m, 25m or 50m (For longer cables, please contact subsea sales for information)	**Fairing**	For extra protection and improved flow dynamics
Dual Head	Dual Head option available. Please contact Subsea sales for information	**Subsea version**	1500m depth rated option available on the standard model without IMU and vehicle speed limited to max 7.2kn.