NORBIT WINGHEAD®X Midwater

Configurable Bathymetric Sonar System

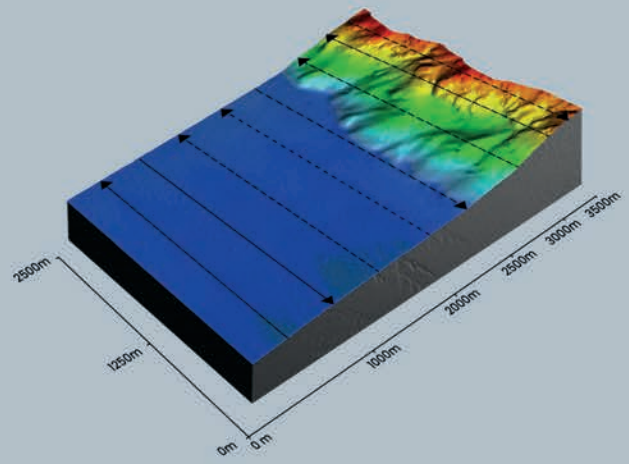



Introducing WINGHEAD X Midwater.

Superior Performance High-Resolution 3D & 4D Long-Range Motion-Stabilised Bathymetric System

Designed to deliver unsurpassed performance in shallow and medium water depths, this high-resolution cylindrical curved-array bathymetric system enables rapid mobilisation anytime, anywhere. Built on NORBIT's state-of-the-art analogue and digital platform, it features powerful signal processing capabilities to ensure the highest quality survey data.

KEY FEATURES

- Software Controlled
- Active Roll, Pitch and Yaw Stabilisation
- Backscatter Outputs
- Dual Swath
- Integrated Field Replaceable Sound Velocity Probe
- Multidetect
- Exceeds IHO Exclusive Order & USACE New Work

Motion Stabilisation, Sensor Integration and Platform Flexibility

The WINGHEAD X Midwater system provides active roll, pitch, and yaw stabilised bathymetry, along with multiple imagery and backscatter outputs available as standard or licensed features. It can be equipped with high-end IMU/GNSS solutions for surface vessel applications, supporting reliable performance across a wide range of platforms—from medium-sized USVs to large vessels and permanent hull installations.

Leveraging NORBIT's extensive R&D expertise and advanced wideband curved-array technology, the WINGHEAD X Midwater model combines compact design, low power consumption, and tight system integration, enabling both existing and new applications to benefit from high-resolution, long-range multibeam sonar performance in demanding environments.

Outline Dimensions

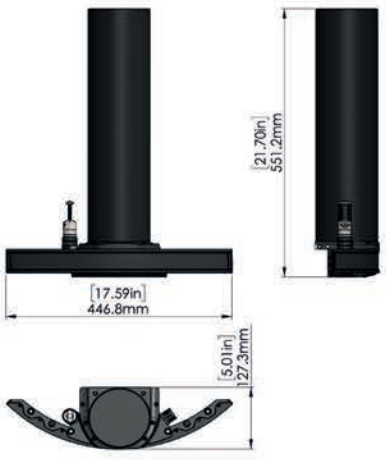

WINGHEAD X - Midwater

NORBIT
- explore more -

Specifications: Integrated and non-integrated

Sonar Specifications standard			
Depth Range	1000m+	**Ping Rate**	Up to 60Hz (Adaptive)
Weight (Alu version)	Excl. bracket: 15.3kg (air) 8kg (water) Incl. bracket: 18.5kg (air) 10.4kg (water)	**Number of Beams**	EA & ED: 1024 2x1024/Dual Swath (option)
Operating Frequency	Nominal 100kHz (frequency agility 80kHz-240kHz, FM & CW)	**Environmental**	Topside: IP67 compliant
Range Resolution	3.6cm @ 100kHz 1.8cm @ 200kHz	**Backscatter Outputs**	Intensity, Sidescan, Snippets, Water Column
Resolution (Across x Along)	2° x 2° @100kHz 1° x 1° @200kHz	**Interface**	Ethernet & Serial
Swath Coverage	5-210° flexible sector	**Depth rating**	100m
Power Consumption	Typical <95W, (10-28VDC, 110-240VAC)	**Operating Temperature Storage Temperature**	-4°C to +40°C (topside -20°C to +55°C) -20°C to +60°C

OEM GNSS/INS Integration Options		
	Applanix OceanMaster	**SBG Apogee**
Position	HOR:±(8mm +1ppm x Distance from RTK station) VER:±(15mm +1ppm x Distance from RTK station)	HOR:±(10mm+0.5ppm x distance from RTK station) VER: ±(15mm+1ppm x distance from RTK station)
Heading Accuracy	0.01° with 4m antenna separation	0.01° with 4m antenna separation
Pitch/Roll Accuracy	0.01° (RTK) / 0.008° (IAPPK)	0.008° RTK/(0.005° PPK)
Heave Accuracy	2cm or 2% (TrueHeave™), 5cm or 5% (Real Time)	2cm or 2% (Delayed heave), 5cm or 5% (Real Time)

Software Options			
Pitch Stabilisation	Real-time compensation for vessel pitch to ensure even sounding density in dynamic conditions	**STX Scanning**	Rapid electronic transmit beam scanning to combine proven 2D bathymetry into 3D georeferenced bathymetry.
Yaw Stabilisation	Real-time compensation for vessel yaw to ensure even sounding density in dynamic conditions	**Dual Swath**	Doubles survey sounding density along track by transmitting two swaths per ping cycle
NORBIT Data Collection and visualisation	Data Collection Tool (DCT) and real time 3D Point Cloud visualisation available for INS-integrated systems	**3rd Party Data Acquisition & Post Processing**	HYPACK, QPS, BeamworX, EIVA, and others

Hardware Options			
Cable Length	2m, 8m, 25m or 50m (For longer cables, please contact subsea sales for information)	**Housing Material**	Optional Titanium housing, available for hull mount
Pole Mount	NORBIT Carbon fibre mounting pole (PORTUS).	**Fairing**	For extra protection and improved flow dynamics Option only available for non-integrated models
Dual Head	Dual Head option available. Please contact Subsea sales for information		

Explore More Features	
Layered Media Detection	Layered Media Detection (LMD) is a NORBIT multibeam solution for hydrographic surveys in areas with suspended mud, enabling simultaneous identification of the fluid mud layer and navigable bottom concurrently.